Woods Pond Watershed Survey

Woods Pond Water Quality Committee

Fiddlehead Environmental Consulting

Lakes Environmental Association

February 2013

Acknowledgments

The following people were instrumental in the Woods Pond Watershed Survey Project and deserve special recognition for their efforts.

Watershed Survey Volunteers

Doug Ake
Carole Ayer
Marty Clark
Barry DeNofrio
Glen Freeman
Kyle Grigg
Nancy Grigg
Shelley Hall
Roy Lambert
Dick LaRose
Tom Leonard
Hank Margolis
Kelly Margolis
Fredric McCubrey
Jeffrey McCubrey
Justen McCubrey
Kim McCubrey
Susan McGuiggan
Mary Maxwell
Lega Medcalf
Mark Meyer
Gary Nihan
Peter O'Neill
Carol Rothenberg
Stan Rothenberg
Aaron Silverblade
Alex Silverblade
Alicia Silverblade
Zoe Silverblade
Tom Wezowicz
Bear Zaidman

Steering Committee

Carole Ayer
Barry DeNofrio
Glen Freeman
Roy Lambert
Kelly Margolis
Tom Wezowicz

Technical Staff

Kristin Feindel, Maine Department of Environmental Protection
Wendy Garland, Maine Department of Environmental Protection
Brie Holme, Portland Water District
Colin Holme, Lakes Environmental Association
Jeff Stern, Fiddlehead Environmental Consulting

Report written by Jeff Stern; maps by Colin Holme; graphic design by Leslie Casachahua.

This project was funded by contributions from residents and businesses in the Woods Pond Watershed, along with generous financial assistance provided by the Town of Bridgton and the Portland Water District. Thank you all very much!

Cover photo of Woods Pond by Jeff Stern
Printed on recycled paper

Table of Contents

Introduction……1

Purpose of the watershed survey……4

Why is it important to protect the Woods Pond Watershed
from polluted runoff?.....5

What is being done to protect the Woods Pond Watershed?.....5

Findings……...6

Site Examples:

Private Road & Driveway ……7

Residential……..8

Commercial ……...9

Town Road……10

Important Points……...11

Recommendations……...12

Next Steps……13

Appendix:

Site location maps

Glossary of Erosion Control Terms

Spreadsheet

Conservation Practices for Homeowners

Permitting ABC's

Where to go for more information

Introduction

Is there a water quality problem in the Woods Pond Watershed?

Woods Pond in Bridgton is 454 feet above sea level, and has a surface area of 462 acres. With a **watershed** covering 3,329 acres (see box and Figure 1), Woods Pond is vital to the economy and quality of life in Bridgton. It is the setting for a growing number of seasonal and year-round residences and two summer youth camps, with a popular town beach at the outlet end. Woods Pond provides recreational opportunities for fishing, boating, and swimming, as well as valuable wildlife habitat.

Watershed

All the land surrounding a lake that drains or sheds its water into the lake through tributaries, ditches, directly over the ground surface or through ground water.

The Woods Pond Watershed is 3,329 acres (Figure 1).

Lakes Environmental Association (LEA) has tested water quality in Woods Pond since 1976. Water quality in the lake is generally good, but like many lakes and ponds in southwestern Maine, there is growing concern about lower water clarity, as well as increased nutrients (such as phosphorus) and algae growth. These conditions accelerated during the previous decade, prompting LEA in 2012 to raise Woods Pond from a "Moderate" degree of concern to a "Moderate/High" level.

Over the past decade, Woods Pond has experienced significant soil runoff from the surrounding land during storm events. This storm water runoff is a type of **nonpoint source pollution** (see box). Rain and snowmelt sweep over the watershed, moving debris and soil into the lake from the surrounding land and streams.

NONPOINT SOURCE POLLUTION

Also called NPS or polluted runoff. Pollution that can not be traced back to a discharge from a particular direct source (e.g., an industrial outfall pipe).

One way to visualize NPS pollution is to think of rain and snow melt as a giant broom that sweeps over the watershed, moving debris and soil into the lake from the surrounding land and streams.

In an undeveloped, forested watershed, storm water runoff (rain and snowmelt) is slowed by trees and shrubs. It is then filtered through the soil and soaks into the uneven forest floor. In this way, nonpoint source pollution is trapped on land so it doesn't flow into the lake. But in *developing* watersheds, the velocity of storm water runoff increases on impervious surfaces like rooftops, compacted and bare soil, gravel roads and pavement. Storm water runoff does not receive the filtering treatment the forest once provided.

Soil particles carry **phosphorus** (a plant nutrient) as a "hitch hiker". If eroding soil carries too much phosphorus into a lake, it upsets the natural balance, and algae in the lake gorge on it like junk food. Algae growth explodes and the lake can become covered with slimy green plant matter, which ruins swimming, boating, fishing and the quality of wildlife habitat.

Excess phosphorus can "fertilize" a lake and lead to nuisance algal blooms.

(continued on page 3)

Figure 1

Woods Pond Watershed

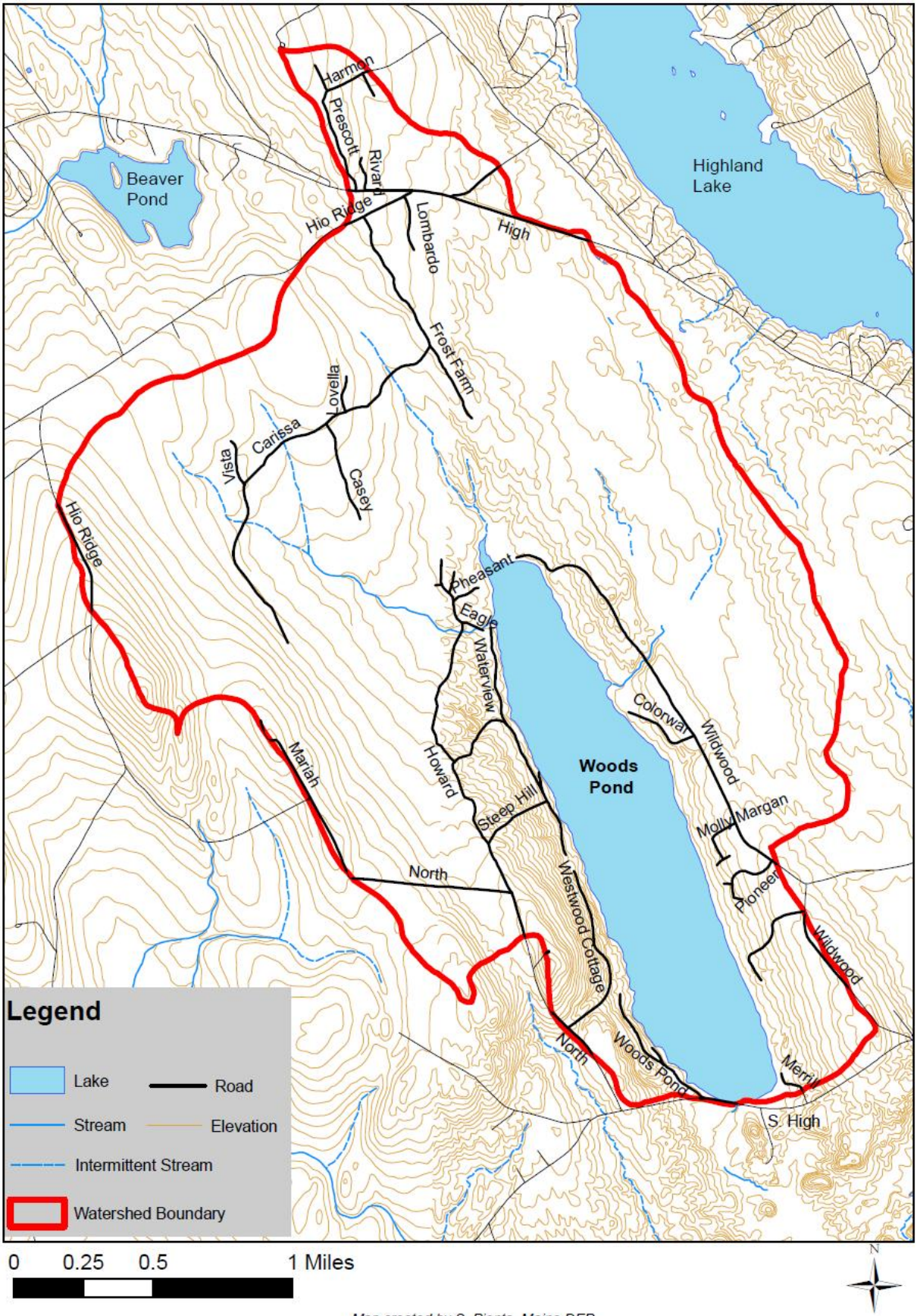

Map created by S. Pienta, Maine DEP

INTRODUCTION (continued from page 1)

Algae “blooms” like this have already occurred in lakes around Lewiston and Augusta. Once these blooms occur, they are enormously expensive to fix. Restoring a lake’s clarity may take decades. That’s why minimizing soil erosion is so important; we want to keep Woods Pond clear and healthy for the enjoyment of all. Prevention is the key.

But in order to fix erosion problems we first need to find out where they are. This is what the survey is all about. We not only look for erosion at the lakeshore, but also in the surrounding watershed which can flow downhill to Woods Pond via streams and surface runoff.

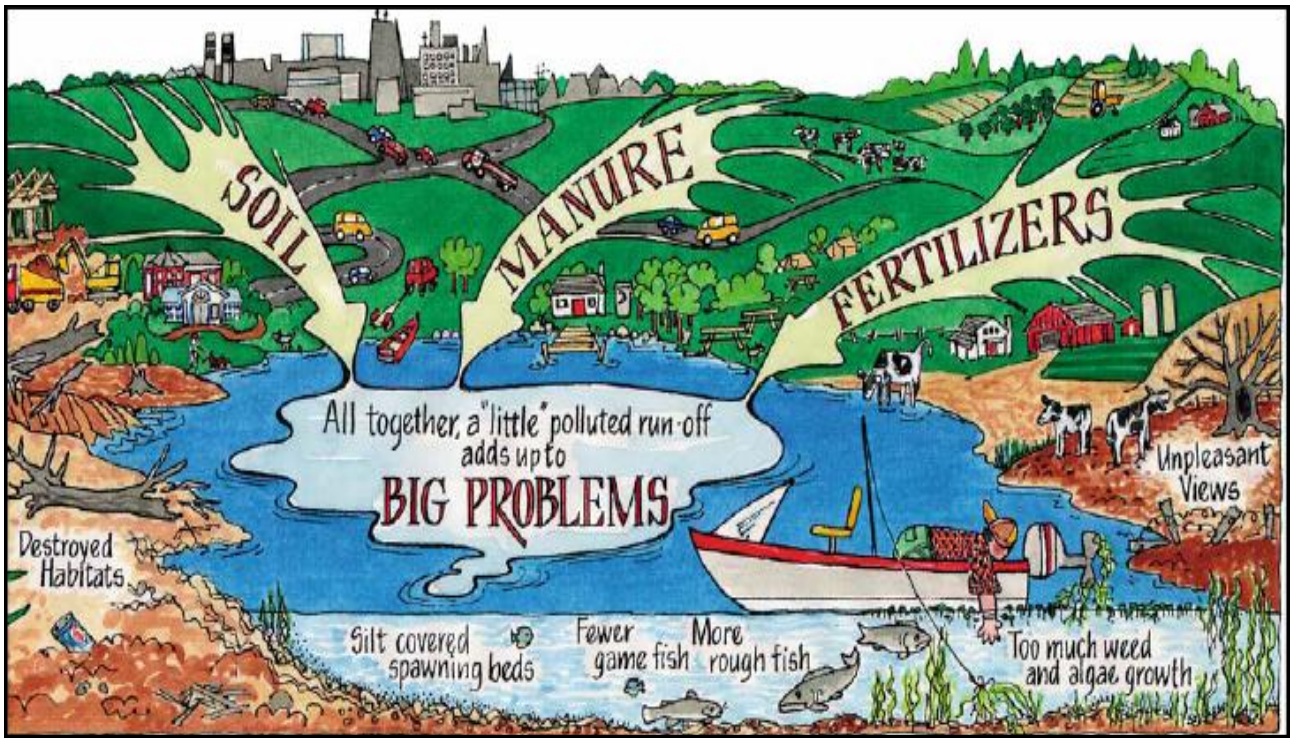

In 2012, the Woods Pond Water Quality Committee (WPWQC) and volunteers surveyed the watershed for soil erosion “hotspots”. Survey results are contained in this report. The survey was funded 100% by contributions; watershed residents and businesses donated generously, as did the Town of Bridgton and Portland Water District. LEA and the Maine Department of Environmental Protection contributed valuable staff time and technical expertise to the project.

Purpose of the Watershed Survey

The primary purpose of the watershed survey is to identify and prioritize existing sources of polluted runoff, particularly soil erosion sites, in the Woods Pond Watershed. However, the following goals are also important:

- Raise public awareness of the connection between land use and water quality, and the impact of polluted runoff.
- Inspire people to become active stewards of the watershed.
- Use the information gathered as a component of a long term lake protection strategy.
- Make general recommendations to landowners for fixing erosion problems on their properties.

Local citizen participation was essential in completing the watershed survey and will be even more important in coming years. Through the leadership of the Woods Pond Water Quality Committee and watershed residents, and with assistance from groups and agencies concerned with lake water quality, the opportunities for stewardship are limitless! We hope that you will find this report interesting and informative.

*Several lakeshore properties were observed to have little or no **vegetated buffer** at the water's edge. It is important to note that buffers of shrubs and trees do a much more effective job than bare ground or grass at keeping NPS pollution from entering lakes. Deep shrub and tree roots also help hold the shoreline.*

(Bear Pond, Hartford, Maine)

Buffers can be installed inexpensively. You can either stop mowing , stop raking to the water's edge and let plants grow up naturally (as in the picture on the right). Or you can plant the area with native trees and shrubs.

Buffers enhance the appearance of shorefront property, increase privacy, and attract birds and other wildlife without ruining the landowner's view.

(MDEP file photo)

Why is it important to protect Woods Pond from polluted runoff?

- Woods Pond provides recreational opportunities to watershed residents and visitors. It is an important contributor to the local economy.
- Woods Pond provides valuable habitat for fish, birds and other wildlife.
- A 1996 University of Maine study demonstrated that lake water quality affects property values. For every meter (3 ft) decline in water clarity, shorefront property values can decline as much as 10 to 20 percent! Declining property values affect individual land-owners as well as the tax revenue of the entire community.
- Once water quality problems occur in a lake, they can be difficult or impossible to fix.

What is being done to protect Woods Pond?

LEA and volunteers have tested water quality in Woods Pond since 1976. Water quality data are shared with the Maine Department of Environmental Protection.

In 2003, Woods Pond became the first lake in the Lakes Region to have a milfoil boat wash station. This station was designed and funded by watershed residents, the Town of Bridgton, and LEA. The Woods Pond Water Quality Committee (WPWQC) was appointed by the town in 2010 to determine proper water level settings that protect the lake and reduce shoreline erosion. WPWQC then examined erosion issues and threats to water quality *throughout* the watershed, culminating in this watershed survey.

Volunteer watershed surveys are one of the most effective ways to protect lake water quality because they get citizens involved in identifying existing and potential sources of polluted runoff. During the course of the watershed survey in the spring and summer of 2012, it was observed that many residents had already installed erosion control meas-ures, such as rubber razor bars and open-top culverts across driveways, to reduce erosion into Woods Pond. Road associations maintain nearly all of the private roads in the watershed.

Woods Pond Watershed Survey Findings

Volunteers and technical staff identified **79 sites** that may have an impact on Woods Pond.

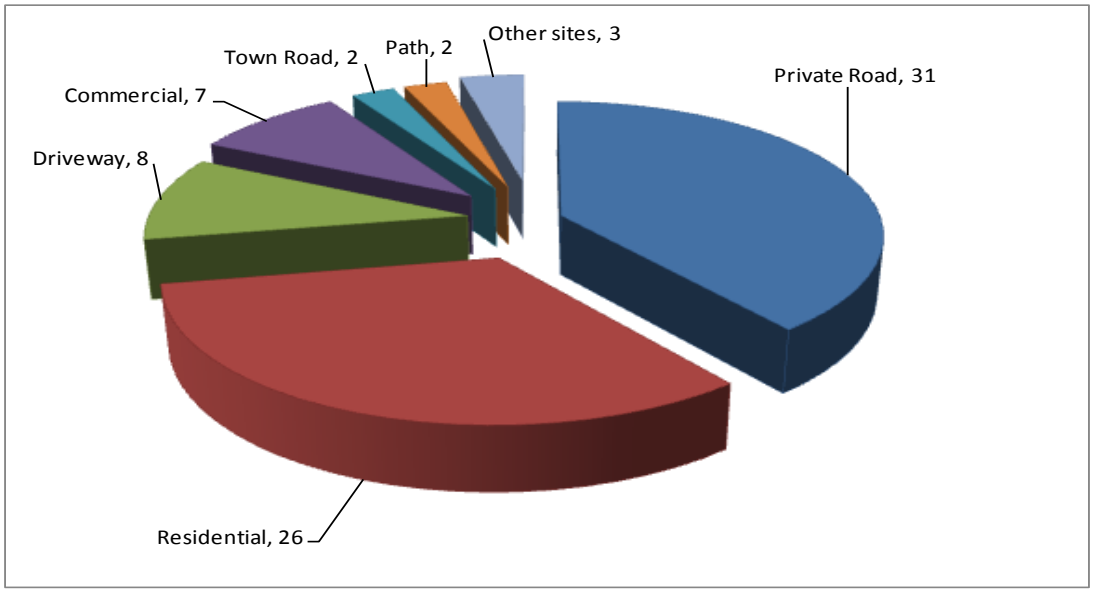

By the numbers

Sites by Land Use:

Private Road	31	(39%)
Residential	26	(33%)
Driveway	8	(10%)
Commercial	7	(9%)
Town Road	2	(3%)
Path	2	(3%)
Beach	1	(1%)
State Road	1	(1%)
Construction Site	1	(1%)
TOTAL	**79**	**(100%)**

Sites by Sector:

Sector 1:	13
Sector 2:	11
Sector 3:	1
Sector 4:	17
Sector 5:	21
Sector 6:	16
TOTAL	**79**

Sites by Impact:

High	10
Medium	29
Low	40
TOTAL	**79**

A total of 9 land uses were associated with the indentified sites in the survey. Detailed descriptions of **private road, driveway, residential, commercial and town roads** sites are on the following pages.

Private Roads & Driveways

31 private road and 8 driveway sites were found. Conservation practices are often similar for private roads and driveways.

Common Problems Identified:

- Poor shaping
- Moderate to severe surface erosion.
- Sediment flowing directly to stream or lake.
- Grader berms trap flows on road.

Recommended solutions:

- Reshape road (crown), and remove grader berms, allowing the road to shed water
- Install water bars, open-top culverts or rubber razor bars to divert flow off road.
- Clean, reshape and armor ditches with angular stone rip rap, or plant grass.

Below are examples of private road problems identified on Woods Pond in this survey.

Problems:

- Poor shaping (no crown and two tracks have developed).
- Ditch backslope erosion.
- Water flows over road causing erosion.

Solutions:

- Properly crown the road to remove the tracks.
- Improve the ditch backslope to reduce erosion and armor.
- Enlarge ditch capacity so it contains water and keeps it from flowing over the road.

Problems:

- Sediment delta has formed in the stream which will wash into Woods Pond.
- Road slumping over culvert.

Solutions:

- Install rock armor around the culvert outlet.
- Properly shape shoulder and build up road.
- Install plunge pool at culvert outlet.

Residential

26 Residential sites were found. Many are low impact, and will be inexpensive to fix.

Common Problems Identified:

- Slight or moderate surface erosion.
- Bare soil.
- Inadequate vegetation along the shoreline.
- Direct flow of sediment into Woods Pond.
- Roof runoff erosion.
- Inadequate erosion control at construction sites.

Recommended Solutions:

- Seed and mulch bare soil.
- Establish or enhance shoreline buffer.
- Limit foot traffic in eroding areas, place mulch or stone on heavily used paths.
- Install waterbar, open-top culvert, rubber razor or other runoff diverters.
- Use dripline trench to catch roof runoff.

Below is an example of residential problems identified on Woods Pond in this survey.

Problems:

- Roof runoff causes erosion.
- Bare soil is exposed to the erosive force of snow and rain.
- Exposed roots indicate heavy foot traffic that increases erosion.

Solutions:

- Install an infiltration trench beneath the roof dripline.
- Apply erosion control mulch on bare areas or plant with grass and shrubs in sunny spots.
- Define and narrow the foot path to reduce erosion.

Residential areas were associated with 33% of the identified sources of polluted runoff to Woods Pond. Their cumulative effect pose a significant threat to water quality. Fortunately, most can be easily corrected.

Commercial

Summer youth camps are an important part of the Woods Pond Watershed. They contribute to the local economy and protect large swaths of land from high density development . 7 commercial sites were found.

Common Problems Identified:

- Slight road erosion.
- Sparse buffers in places.
- Beach erosion.
- Inadequate armoring of culvert inlets and outlets.

Recommended Solutions:

- Armor culvert inlets and outlets.
- Install plunge pools below culverts to hold runoff and catch sediment before it enters streams or Woods Pond.
- Properly shape the road.
- Reduce beach erosion and plant buffers

Below are examples of commercial sites identified on Woods Pond in this survey.

Problems:

- Inadequate buffer where erosion washes into lake.
- Eroded material flows to lake.

Solutions:

- Apply additional erosion control mulch to bare areas.
- Enhance buffer.

Problems:

- Berm traps storm water on the road which causes erosion.
- Rut in road indicates that the road is not crowned.

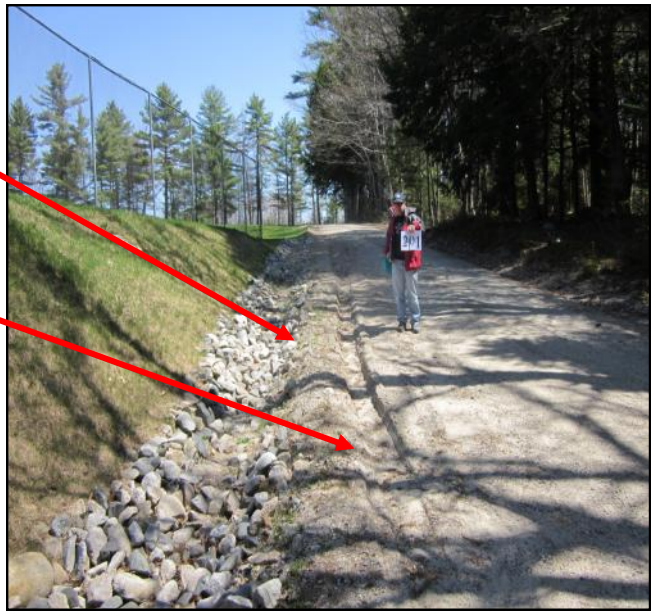

Solutions:

- Remove berm to allow runoff to enter the ditch.
- Properly crown the road.

Town Road

2 town road sites were found. One will be easy to fix, but the other one is a major contributor to erosion and fixing it will be complicated.

Common Problems Identified:

- Moderate to severe shoulder erosion.
- Severe ditch erosion.
- Direct flow of sediment to streams or Woods Pond.
- Unstable culvert inlet and outlet.
- Winter sand build-up.
- Poor shaping and inappropriate surface material.

Recommended Solutions:

- Clean, reshape and armor ditches with stone or plant grass.
- Armor culvert inlets and outlets.
- Install plunge pools below culverts to hold runoff and catch sediment before it enters streams or Woods Pond.
- Properly size and align culverts.
- Properly shape road and install appropriate surface material.

This is a particularly problematic erosion site where Wildwood Road crosses Sucker Brook. The town and private road association will need to work together to solve this problem.

Problems:

- Deteriorating road above the culvert creates a direct path for eroding material to enter the brook.
- Berm traps water on the shoulder and has created a channel to the brook.

Solutions:

- Remove berm so storm water runoff flows into the forest buffer.
- Build up road over the culvert.
- Elongate culvert and add rip-rap over the extension to catch and trap sediment before it enters the brook.
- Coordinate with the private road association to minimize erosion on the unpaved part of the road that is used as a turnaround for town snowplows.

Important Points!

- A full summary of all erosion sites identified in the survey is contained in a spread sheet in the appendix. Sites are grouped in order by survey sector. Each listing shows the map site number, the type of problem(s) encountered, location, size or area, and recommended solutions.

- In addition to the surveyed sites, numerous lakeshore properties were observed to have little or no vegetated buffer at the water's edge. Since the primary purpose of this survey was to document erosion, not all of these sites were included in the survey results because some weren't actively eroding. However, it is important to note buffers of shrubs and trees do a much more effective job than bare ground or grass to keep NPS pollution from entering lakes.

- During the survey, we found that many landowners in the Woods Pond Watershed have already taken steps to protect water quality. Surveyors found numerous open top culverts and waterbars across driveways, as well as dripline trenches under roof edges. These simple conservation measures do an effective job of minimizing, and in some cases eliminating, soil erosion. Landowners' concern for protecting Woods Pond bodes well for future efforts to continue the great erosion control work.

Site Rankings

Sites in the spreadsheet were ranked according to these criteria:

- Impact was assigned by considering factors such as the size of disturbed area, slope, soil type, amount of soil that's eroding, proximity to water, and size of buffer. **Low** impact eroding sites are those with limited transport off-site. At **medium** impact sites, sediment is transported off-site, but the erosion does not reach a high magnitude. Large sites where there is significant erosion that flows directly into the lake, a stream, or ditch, were rated **high** impact.

- Cost is an important factor in planning for restoration. **Low** cost sites were estimated to cost less than $500 to fix. An estimate of $500 to $2,500 was rated **medium**. If the estimated cost to fix a site exceeded $2,500, a **high** rating was assigned.

With a few exceptions, virtually all of the sites identified in the survey are significant to one degree or another. The cumulative effect of many "low" and "medium" impact sites can exceed that of any one "high" impact site. This should be considered when a strategy is developed to address problems in the watershed.

Recommendations

Fixing the erosion sites identified in this survey will require efforts by the entire community. Below are some suggestions for individuals and groups.

Individual Citizens

- Prevent runoff from washing sediment into Woods Pond. Detain runoff in depressions or divert flow to vegetated areas. Call LEA or Maine Department of Environmental Protection (MDEP) for free technical assistance.
- Minimize the amount of cleared land and road surfaces.
- Stop mowing and raking, and let lawn and raked areas revert back to natural plants. Deep shrub and tree roots help hold the shoreline.
- Avoid exposing bare soil. Seed and mulch bare areas. Use erosion control mulch around construction projects which involve excavation.
- Do not bring in sand or rebuild beaches. Call LEA, Fiddlehead Environmental Consulting or MDEP for technical assistance with beach or shoreline erosion.
- Call the town code enforcement officer before cutting vegetation within 250 feet of the shoreline. The Bridgton town office phone number is 207-647-8786.
- Join the efforts of the Woods Pond Water Quality Committee and LEA. LEA conducts water testing and provides erosion control assistance to landowners and the town.

Woods Pond Water Quality Committee

- Develop an active membership, provide educational materials and guidance to members of the Woods Pond Watershed community and to town officials.
- Organize workshops and volunteer “work parties” to start fixing identified erosion problems and teach citizens how to fix similar problems on their own properties.
- Educate municipal officials and the watershed community about lake issues and work cooperatively to find solutions.
- Use this watershed survey to keep track of fixed sites and new problems.

Private Road Associations

- Minimize road runoff by doing regular, comprehensive maintenance.
- Decrease water velocity in steep ditches by installing check dams.
- Get a copy of “*Gravel Road Maintenance Manual – A Guide for Landowners*.” This reference is a must for anyone managing a gravel road. (Visit the MDEP website www.maine.gov/dep/blwq/docwatershed/roads/gravel_road_manual.pdf.)
- Use hard packing road material and regularly grade gravel roads to allow water to drain into ditches and adjacent vegetation.
- For more extensive problems, seek technical help. Contact LEA, Fiddlehead Environmental Consulting or MDEP to request technical assistance. Contact information is at the end of this report.

Municipal Officials

- Enforce shoreland zoning standards to assure full protection of Woods Pond.
- Conduct regular maintenance on town roads in the watershed, and fix town road problems identified in this survey.
- Participate in and support long term watershed management projects.
- Promote training in erosion control for road crews, planning boards and conservation commissions.

Next Steps

With publication of this report, the watershed community has taken a major step forward by completing the survey of erosion sites. We now have the information needed for planning purposes, and for fundraising, as well.

What happens next? The Woods Pond Water Quality Committee and LEA are already preparing a grant proposal to the MDEP Section 319 Program that, if awarded, will allow us to share the costs of controlling erosion with the town, summer youth camps, private road associations, and property owners. This grant proposal is due in late spring, 2013. If awarded, it will start in January, 2014 and run for two years. Additional action items in the coming years can include:

2013:

- Create a formal lake association that encompasses representatives from the ad hoc Woods Pond Water Quality Committee, private road associations, summer youth camps, and watershed residents/landowners. Coalescing into a formal lake association will facilitate protection efforts in the coming years.
- Apply for nonprofit status once the lake association is formed. This will allow the association to directly submit proposals for grants (most funders require nonprofit status), as opposed to the current situation where we must rely on another organization to be our grant sponsor.

2014 -2016:

- Implement the MDEP erosion control grant, assuming it is awarded. Given the realities of current restrictions in funds, it is likely this grant will only be the first phase in fixing a large chunk, but not all, of erosion sites that were found in the watershed survey. Therefore, the lake association should seek subsequent phases, as needed, from the MDEP Section 319 Program, as well as other erosion control grants.

“Evergreen” action items (Those that can begin right now and are ongoing):

- Remain vigilant about keeping milfoil out of Woods Pond.
- Keep an eye out for new erosion sites that have emerged after the watershed survey was completed.
- Continue monitoring lake water levels and make recommendations to the Town of Bridgton about water level management with an eye toward reducing shoreline erosion.
- Continue education efforts about erosion control in the watershed. It has been noted elsewhere in this report that volunteers and technical staff identified numerous places around the lake where landowners have already installed erosion control measures. This is a great sign, but we need to educate all users – especially young people who are the next generation of lake stewards - about the link between erosion and diminishing water quality.
- Encourage participation in LEA’s “Clean Lakes Check-Up” Program to identify and minimize erosion hot spots.

Appendix

- **Site Location Maps**
- **Glossary of Erosion Control Terms**
- **Spreadsheet**
- **Conservation Practices for Homeowners**
- **Permitting ABCs**
- **Where To Go For More Information**

Map Key:

BA = Beach Access
C = Commercial
CS = Construction Site
D = Driveway
P = Path/Trail
PR = Private Road
R = Residential
SR = State Road
TR = Town Road

Glossary of Erosion Control Terms

Armor: Reinforcement of ditches, lake shore, culvert inlets or outlets, or embankments with angular rocks to resist erosion.

Berm: As used in this report, “berm” refers to the build-up of road gravel, winter sand or other material on the sides of a road that prevents storm water from flowing off the road into a ditch or the forest. Berms can be formed during road grading or plowing.

Check Dam: A small dam made of small angular stones placed in steep ditches for the purposes of reducing water velocity in the ditch and trapping eroded material.

Crown: Creating a high point that runs lengthwise along the center of a road. Either side of this high point is sloped gently away from the center toward the outer edge of the road. Crowning is the quickest way to get water off the road to prevent erosion and development of potholes.

Culvert: A closed pipe or other conduit, other than a bridge, that allows water to pass under a road.

Ditch: A small, artificial channel for conveying water along the side of a road.

Erosion: The wearing away of natural (earth) and human-made (ditch, road, embankment) surfaces by the action of external forces such as water and wind.

Infiltration: Passage of water through the soil surface into the ground.

Mulch: A natural protective covering over the land surface that conserves moisture, holds soil in place, aids in establishing vegetation, and reduces temperature fluctuations. **Erosion Control Mulch** prevents erosion from steep slopes.

Plunge Pool: Also known as a **Sediment Basin**, a plunge pool is a drainage structure that collects water before it flows into a stream or lake. Plunge pools are usually located at the lowest end of a ditch. They slow runoff so that storm water flowing down a ditch has a chance to drop out its sediment before entering a stream or lake.

Turnout: Turnouts are used to direct ditch water away from the road into a vegetated buffer area or sediment basin. A turnout should have a flared end section that is level and lined with rock to spread out the flow.

Vegetated Buffer: A natural or planted area of trees, shrubs, or other vegetated ground cover located between developed areas (such as roads, driveways, or residences) and a lake or stream. These are excellent at removing sediment and nutrients from storm water runoff. A **Rain Garden** is a type of buffer that collects storm water runoff in a low area and traps contaminants.

Water Bar: Water bars can be used on roads and driveways to divert water off the surface during a storm. A water bar is a ridge (like a speed bump) that runs diagonally off the road or driveway, typically at a 30° angle. It stops water from running down the road and diverts it to the side. Common types of water bar seen on roads and driveways around Woods Pond include **Rubber Razors** and **Open-top Culverts**.

Conservation Practices for Homeowners

After reading this report, you probably have a general idea about how to make your property more lake-friendly. However, making the leap from concept to construction may be challenging.

The MDEP and Portland Water District completed a series of fact sheets that answer many common how-to questions. The fact sheets profile common conservation practices and include detailed instructions, diagrams and color photos about installation and maintenance.

The series also includes six native plant lists. Each one is tailored to different site conditions (e.g., full sun and dry soils). The lists include plant descriptions from the MDEP's *Buffer Handbook* and small color photos of each plant to make plant selection easier.


DRIPLINE TRENCH

~managing roof runoff on homes without gutters~

Also Called: Roof Dripline Trench, Infiltration Trench

Purpose: Dripline Trenches collect and infiltrate stormwater, and control erosive runoff from the rooftop. The trench will collect roof runoff and store it until it soaks into the soil. These systems will also minimize wear on your house by reducing back splash.

Installation. Dig a trench that is 18" wide and at least 8" deep along the drip line. Slope the bottom away from the house so that water will drain away from the foundation. Make sure to dispose of the soil in a flat area where it cannot be washed into the lake. Fill the trench with ½"-1½" crushed stone. The front and sides of the trench may be edged with stone or with pressure-treated lumber to hold the stones in place.

Extend the life of the dripline trench by lining the sides with non-woven geotextile fabric and filling to within 3" of the ground level with stone. Fold a flap of non-woven geotextile fabric over the top of the trench and top off with additional stone.

Note: Dripline trenches work best in sand and gravel soils that can quickly disperse a large volume of water. They should not be used on structures with improperly sealed foundations, as flooding may result.

Materials: Crushed stone can be purchased at your local gravel pit. Other geotextiles, including landscaping weed barrier, can be substituted for smaller projects. Contact your local Soil and Water Conservation District for suppliers of non-woven geotextile fabric.

Maintenance. To maintain these structures, periodically remove accumulated debris and weeds from the surface. Trenches lined non-woven geotextile fabric will require less frequent maintenance, however, they will still clog over time and the stone will need to be removed and washed to clean out the accumulated sediment and debris.

Fact sheets are available to help you install conservation practices on your property. Download at http://www.maine.gov/dep/land/watershed/materials.html

Rubber Razor—Use this structure in a gravel driveway or camp road. It can be plowed over only if the plow operator is aware of its presence and lifts the plow blade slightly. Place it at a 30 degree angle to the road edge and direct the outlet toward a stable vegetated area.

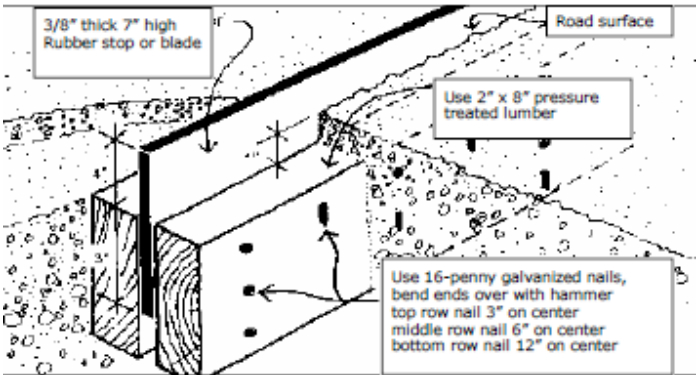

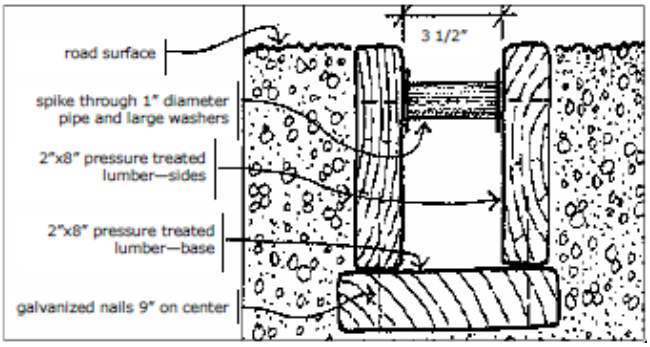

Open Top Culvert— Use this structure in a gravel driveway or camp road that does not get plowed in the winter. Place it at a 30 degree angle to the road edge and point the outlet into stable vegetation. Remove leaves and debris as needed.

Drywell—Use a drywell to collect runoff from roof gutter downspouts. Drywells can be covered with sod or left exposed for easy access and cleanout. Drywells and infiltration trenches work best in sandy or gravelly soils.

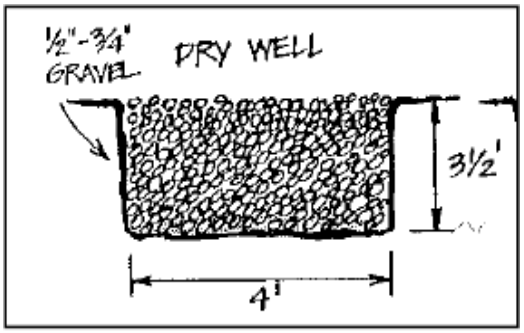

Permitting ABCs

Protection of Maine's watersheds is primarily ensured through laws and ordinances created and enforced by the State of Maine and local municipalities, as well as through the goodwill of lake residents. The following laws and ordinances require permits for activities adjacent to wetlands and water bodies.

Shoreland Zoning Law—

Construction, clearing of vegetation and soil movement within 250 feet of lakes, ponds, and many wetlands, and within 75 feet of most streams, falls under the Shoreland Zoning Act, which is administered by the Town through the Code Enforcement Officer and the Planning Boards.

***Natural* Resources Protection Act (NRPA)—**

Soil disturbance & other activities within 75 feet of the lakeshore or tributary stream also falls under the NRPA, which is administered by the MDEP. Contact MDEP and the Town Code Enforcement Officer if you have any plans to construct, expand or relocate a structure, clear vegetation, create a new path or driveway, stabilize a shoreline or otherwise disturb the soil on your property. Even if projects are planned with the intent of enhancing the environment, contact the MDEP and town to be sure.

How to apply for a Permit by Rule with MDEP—

To ensure that permits for small projects are processed swiftly, the MDEP has established a streamlined permit process called **Permit by Rule**. These one page forms (shown here) are simple to fill out and allow the MDEP to quickly review the project.

- Fill out a notification form before starting any work. Forms are available from the town code enforcement officer, MDEP offices, or online at http:// www.maine.gov/dep/land/nrpa/pbrform.pdf
- The permit will be reviewed by MDEP within 14 days. If you do not hear from MDEP in 14 days, you can assume your permit is approved and you can proceed with work on the project.
- Follow all standards required for the specific permitted activities to keep soil erosion to a minimum. It is important that you obtain a copy of the standards so you will be familiar with the law's requirements.

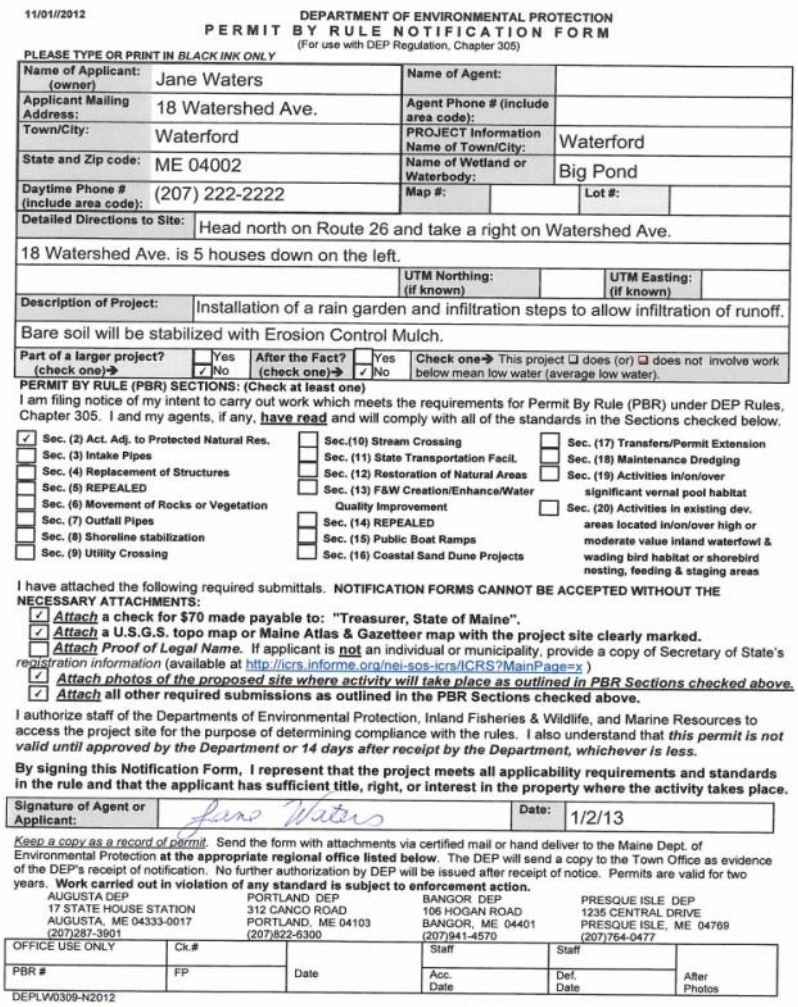

11/01//2012

DEPARTMENT OF ENVIRONMENTAL PROTECTION
PERMIT BY RULE NOTIFICATION FORM
(For use with DEP Regulation, Chapter 305)

PLEASE TYPE OR PRINT IN *BLACK INK ONLY*

Name of Applicant: (owner)	Jane Waters	Name of Agent:	
Applicant Mailing Address:	18 Watershed Ave.	Agent Phone # (include area code):	
Town/City:	Waterford	PROJECT Information Name of Town/City:	Waterford
State and Zip code:	ME 04002	Name of Wetland or Waterbody:	Big Pond
Daytime Phone # (include area code):	(207) 222-2222	Map #: / Lot #:	
Detailed Directions to Site:	Head north on Route 26 and take a right on Watershed Ave.		
18 Watershed Ave. is 5 houses down on the left.			
		UTM Northing: (if known) / UTM Easting: (if known)	
Description of Project:	Installation of a rain garden and infiltration steps to allow infiltration of runoff.		
Bare soil will be stabilized with Erosion Control Mulch.			
Part of a larger project? (check one)→ ☐ Yes ☑ No	After the Fact? (check one)→ ☐ Yes ☑ No	Check one→ This project ☐ does (or) ☐ does not involve work below mean low water (average low water).	

PERMIT BY RULE (PBR) SECTIONS: (Check at least one)

I am filing notice of my intent to carry out work which meets the requirements for Permit By Rule (PBR) under DEP Rules, Chapter 305. I and my agents, if any, **have read** and will comply with all of the standards in the Sections checked below.

- ☑ **Sec. (2) Act. Adj. to Protected Natural Res.**
- ☐ **Sec. (3) Intake Pipes**
- ☐ **Sec. (4) Replacement of Structures**
- ☐ **Sec. (5) REPEALED**
- ☐ **Sec. (6) Movement of Rocks or Vegetation**
- ☐ **Sec. (7) Outfall Pipes**
- ☐ **Sec. (8) Shoreline stabilization**
- ☐ **Sec. (9) Utility Crossing**
- ☐ **Sec.(10) Stream Crossing**
- ☐ **Sec. (11) State Transportation Facil.**
- ☐ **Sec. (12) Restoration of Natural Areas**
- ☐ **Sec. (13) F&W Creation/Enhance/Water Quality Improvement**
- ☐ **Sec. (14) REPEALED**
- ☐ **Sec. (15) Public Boat Ramps**
- ☐ **Sec. (16) Coastal Sand Dune Projects**
- ☐ **Sec. (17) Transfers/Permit Extension**
- ☐ **Sec. (18) Maintenance Dredging**
- ☐ **Sec. (19) Activities in/on/over significant vernal pool habitat**
- ☐ **Sec. (20) Activities in existing dev. areas located in/on/over high or moderate value inland waterfowl & wading bird habitat or shorebird nesting, feeding & staging areas**

I have attached the following required submittals. **NOTIFICATION FORMS CANNOT BE ACCEPTED WITHOUT THE NECESSARY ATTACHMENTS:**

- ☑ ***Attach* a check for $70 made payable to: "Treasurer, State of Maine".**
- ☑ ***Attach* a U.S.G.S. topo map or Maine Atlas & Gazetteer map with the project site clearly marked.**
- ☐ ***Attach Proof of Legal Name.*** If applicant is **not** an individual or municipality, provide a copy of Secretary of State's *registration information* (available at http://icrs.informe.org/nei-sos-icrs/ICRS?MainPage=x)
- ☑ ***Attach photos of the proposed site where activity will take place as outlined in PBR Sections checked above.***
- ☑ ***Attach* all other required submissions as outlined in the PBR Sections checked above.**

I authorize staff of the Departments of Environmental Protection, Inland Fisheries & Wildlife, and Marine Resources to access the project site for the purpose of determining compliance with the rules. I also understand that ***this permit is not valid until approved by the Department or 14 days after receipt by the Department, whichever is less.***

By signing this Notification Form, I represent that the project meets all applicability requirements and standards in the rule and that the applicant has sufficient title, right, or interest in the property where the activity takes place.

Signature of Agent or Applicant:	Jane Waters	Date:	1/2/13

Keep a copy as a record of permit. Send the form with attachments via certified mail or hand deliver to the Maine Dept. of Environmental Protection **at the appropriate regional office listed below**. The DEP will send a copy to the Town Office as evidence of the DEP's receipt of notification. No further authorization by DEP will be issued after receipt of notice. Permits are valid for two years. **Work carried out in violation of any standard is subject to enforcement action.**

AUGUSTA DEP	PORTLAND DEP	BANGOR DEP	PRESQUE ISLE DEP
17 STATE HOUSE STATION	312 CANCO ROAD	106 HOGAN ROAD	1235 CENTRAL DRIVE
AUGUSTA, ME 04333-0017	PORTLAND, ME 04103	BANGOR, ME 04401	PRESQUE ISLE, ME 04769
(207)287-3901	(207)822-6300	(207)941-4570	(207)764-0477

OFFICE USE ONLY	Ck.#		Staff	Staff	
PBR #	FP	Date	Acc. Date	Def. Date	After Photos

DEPLW0309-N2012

Where To Go For More Information

Lakes Environmental Association

230 Main Street
Bridgton, ME 04009
207-647-8580

Colin Holme, Assistant Director
colin@leamaine.org
www.mainelakes.org

LEA is a non-profit, membership organization. Programs include water testing on 37 lakes and ponds, technical assistance to landowners and contractors in preventing erosion, watershed education programs, invasive plant prevention, and GIS mapping for town comprehensive planning.

Fiddlehead Environmental Consulting

P.O. Box 783
Harrison, ME 04040
207-627-3126

Jeff Stern, Watershed Specialist
sternjm@hotmail.com

Fiddlehead Environmental Consulting assists property owners, lake and river protection associations, and towns, with watershed planning and survey work, reports, water quality testing, environmental education, training, and grant writing.

Maine Department of Environmental Protection

312 Canco Road
Portland, ME 04103
207-615-2451
1-888-769-1036 (toll free)

Wendy Garland, Watershed Manager
Wendy.Garland@maine.gov
www.maine.gov/dep

MDEP provides technical assistance, reference materials, permitting, environmental education, project funding opportunities, and stewardship activities for streams, lakes and marine waters.

Portland Water District

1 White Rock Road
Standish, ME 04084
207-523-5405

Brie Holme, Water Resources Specialist
bholme@pwd.org
www.pwd.org

The Portland Water District provides drinking water from Sebago Lake to more than 200,000 people in southern Maine. PWD supports surveys and erosion control activities in areas that supply Sebago Lake, which includes the Woods Pond Watershed.

Maine Nonpoint Source Training and Resource Center

17 State House Station
Augusta, ME 04333
207-287-7726

Bill Laflamme
william.n.laflamme@maine.gov
www.maine.gov/dep/land/training

Offers courses in erosion control for contractors, including a primer and exam for Certified Professional in Erosion and Sediment Control, camp road maintenance, and storm water management.